HANGCHA

HC FORKLIFT AMERICA CORPORATION

Company address:
10405-A Granite Street
Charlotte, NC 28273

Toll Free：(888) 652-8395
Phone：(980) 888-8335
Fax：(980) 888-8336

america@hcforklift.com
www.hcforkliftamerica.com

ISO9001:2015 ISO14001:2015

HANGCHA GROUP CO., LTD. reserves the right to make any changes without notice concerning colors, equipment, or specifications detailed in this brochure, or to discontinue individual models. The colors of trucks, delivered may differ slightly from those in brochures.

2021 VERSION 1 / COPYRIGHT 2021

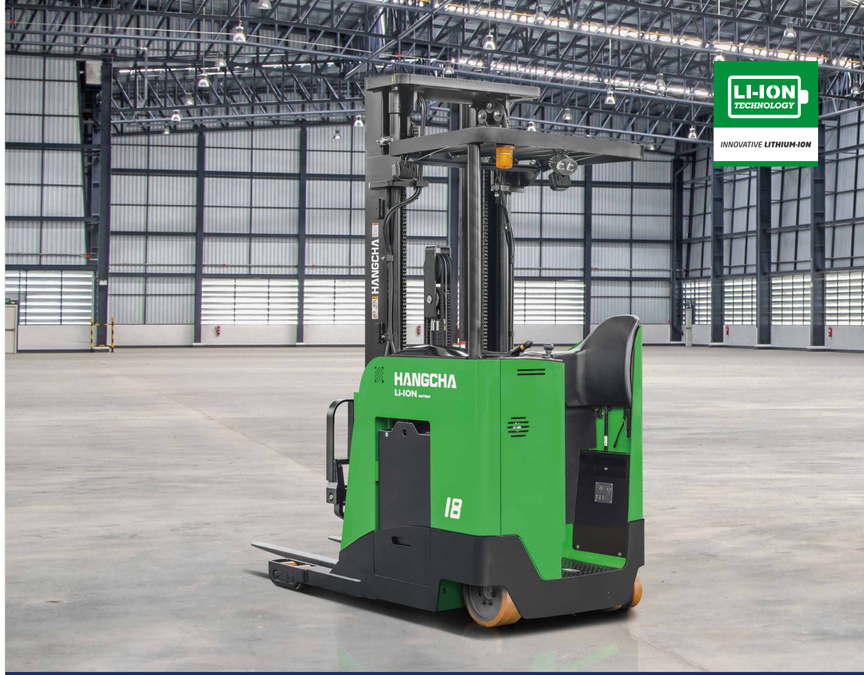

X Series Lithium-ion Narrow Aisle Pantograph Reach Truck

with capacity of 3,000 to 4,500lbs

Making Material Handling Easier
SINCE 1956

HANGCHA

EFFICIENT TRUCKS

The 3,000-4,500lb lithium-ion pantograph reach trucks are suitable for operations in narrow aisles and limited spaces. These trucks feature a high lift, large load capacity, pantograph, and a small turning radius. Using their advanced performance and technology, the reach trucks add to the efficiency of operations while maintaining reliability and a high level of safety. The X Series Lithium-ion Narrow Aisle Pantograph Reach Truck is the ideal tool for material handling in warehouses, supermarkets, and workshops.

Appearance

The X Series Lithium-ion Narrow Aisle Pantograph Reach Truck is designed to stack and retrieve goods efficiently in narrow warehouses and at high lift heights while still maintaining a lifting capacity of up to 4,500lbs. The exterior of this forklift is powder coated in a durable, easy to see, green finish that designates it as a lithium-ion model.

Stability

- The battery placed at the bottom of the chassis to create a low center of gravity. This allows the truck to have good stability.
- The four-pivot structure provides stability when the truck is being used to perform a high lift.

Load Capacity

Reliable & Safe

103.2″
Aisle Width

421″
Max. Lift Height

Highly Efficient

- The truck can operate in narrow aisles thanks to its small turning radius.
- Both a high-power pump motor and a silent gear pump (CONCENTRIC) are used to improve the lifting speed, lowering speed, and operating efficiency.
- With several power modes, the truck is able to adapt to different operating conditions.
- The regenerative braking system provides an increase in the truck's operating time.

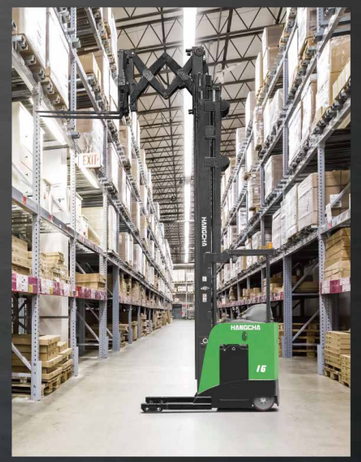

The control handle and backrest can be adjusted according to the operator's optimal driving position.

Comfort

The hanging pedal alleviates operator fatigue when driving for a long period of time by being placed in a comfortable position for the operator.

The operator is able to get on and off the truck more comfortably thanks to the low step-on height of the reach truck's operator compartment.

The handle, backrest, instruments, and switches were designed with ergonomics in mind to make operations more comfortable and flexible.

The lifting system is optimized for the operator to have an excellent line of sight through the mast.

The lateral removal of the battery provides easier maintenance and allows for the battery to be swapped out when running in continuous operating conditions.

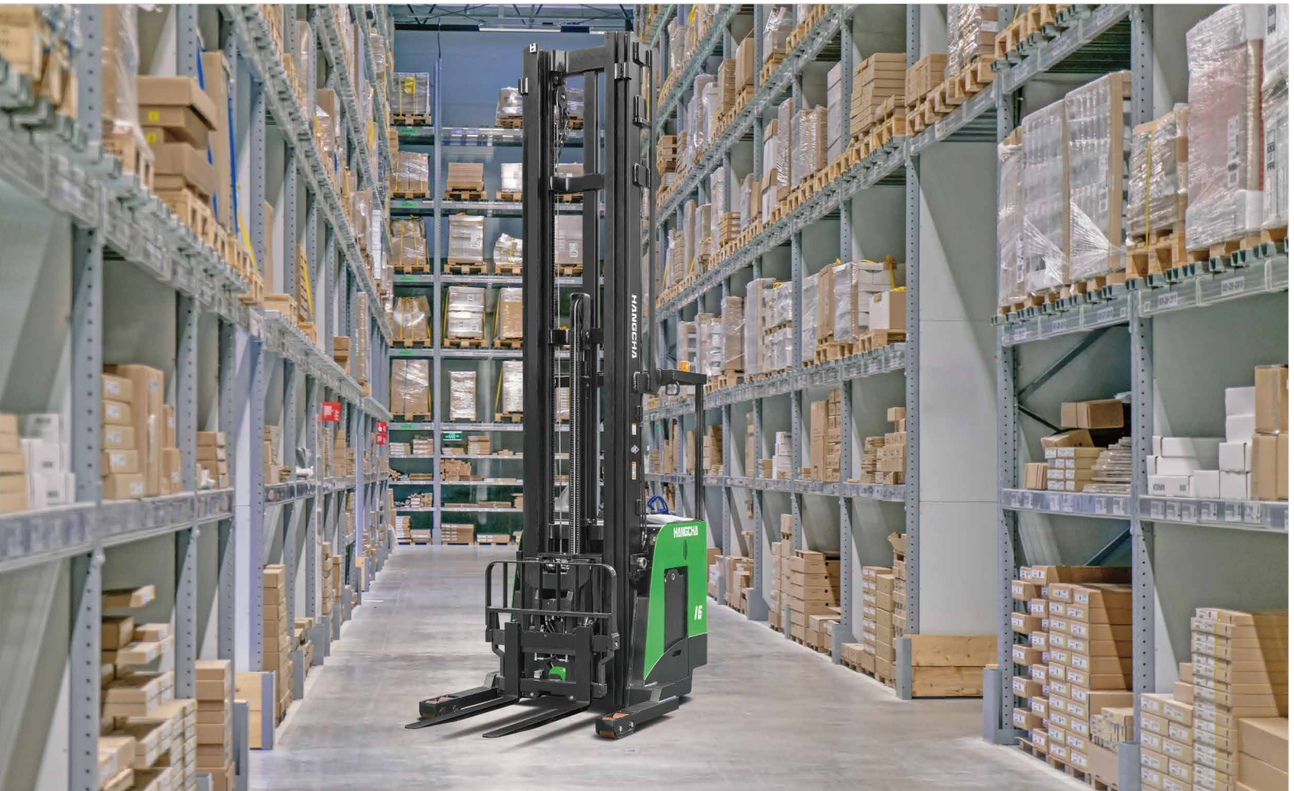

Reliability and Safety

- The four-pivot structure, low center of gravity, and high strength of the main frame components are designed to withstand the maximum load capacity of the reach truck.
- The controller, connectors, battery plug, and cut-off switch are all parts from industry known suppliers to ensure reliability, performance, and ease of service.
- The ZF transmission, SCHABMULLER drive motor, and the efficient AC power system greatly improve the reliability and service life of the narrow aisle reach truck.
- The controller manipulates the truck's steering angle, lifting height, and traveling speed in unison to provide safer operations.

The multi-function control handle's unique shape and angled design helps to minimize hand movement and muscle fatigue.

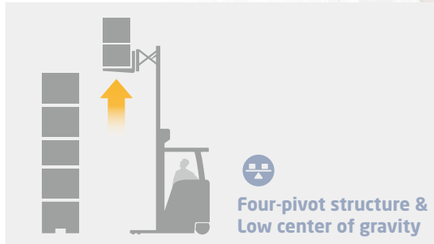

With the pedal sensing system, the truck can be driven only if the driver stands on the pedal. If the operator takes their foot off the pedal, active braking is initiated to prevent an accident.

The Full Free Lift 3 Stage Mast provides great visibility for the operator and improves operations safety.

Maintenance

- The brushless AC motor is maintenance-free and significantly reduces the total cost of ownership.
- The maintenance hatch opens wide enough to enable easy repair, maintenance, and tuning of the equipment.
- The battery is maintenance-free meaning that the battery does not need to be watered or checked.
- The controller and electrical components are placed together in the chassis and are highly integrated.

The large-screen LCD display with fault self-diagnosis functions can accurately display information in harsh environments.

CATL Lithium Iron Phosphate Battery Pack

- Integrated Battery Management System (BMS) continually monitors energy management and ensures reliable operation.
- HANGCHA provides these Lithium Iron Phosphate ($LiFePO_4$) battery packs with up to a 10 year or 20,000 hour warranty.
- See warranty certificate for specific warranty information on the Lithium Iron Phosphate battery packs.

Battery Capacity	Standard	Optional
Battery Capacity (V/Ah) (kW·h)	36V/606Ah 21.82kW·h	36V/813Ah 29.27kW·h

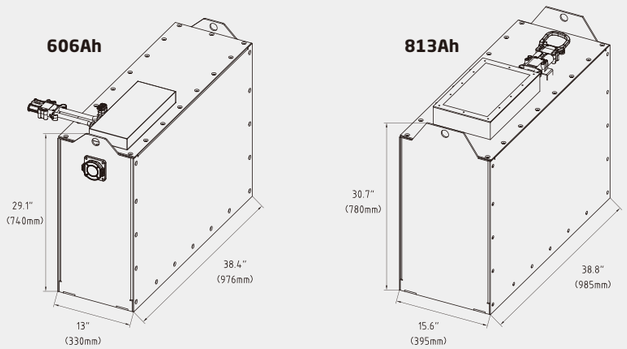

Standard Titan Charger (36V/200Ah)

Optional Titan Dual Charging Guns Charger (36V/400Ah)

Advancement

- The electronic parking brake greatly improves the safety of the operator and the truck.
- The fast lifting and lowering speeds are highly efficient.
- The suspension system and hanging pedals improve operator comfort.
- The integrated mechanical, electrical, and hydraulic controls work in unison to regulate the speed of the truck when traveling and to move the forks more precisely and stably.
- The newly equipped AC control system supports longer working times by precisely managing and adjusting the performance of the truck.

High Efficiency

Standard Specification

/ AC Motor and Controller
/ Multi-Function Instrument Cluster
/ Electric Power Steering System
/ 198" (5.03m) Full Free-Lift Stage 3 Mast
/ Tilting Fork
/ Load Backrest
/ Overhead Guard
/ Soft Landing System
/ Safe Operating System
/ Automatically Decelerates when Cornering
/ Speed Automatic Limit when Mast High Lifting
/ Damper Pedal
/ Adjustable Backrest and Armrest
/ Battery Side Roll Out
/ Multi-Task Control Handle
/ Electro-Hydraulic Proportional Valve System
/ Polyurethane Tire
/ Headlights
/ Clipboard
/ Emergency Cut-Off Switch
/ Electric Horn
/ Static Strap
/ Electric Parking Brake
/ Strobe Light

Options

/ Charger
/ 813Ah Capacity Battery
/ Other Dimensions of Forks
/ Mast Shield
/ Widened or Heightened Load Backrest
/ Sideshifter
/ Blue Light
/ Rear Working Light
/ Cabin Ceiling Light
/ Overhead Fan
/ Camera System
/ 12V Power Plug
/ Freezer
/ Fire Extinguisher

Mast Specification

	Lift	Height, Mast Lowered	Height, Mast Extended		Free lift	Load capacity @610mm/24inch			
			With Backrest	Without Backrest		CQD14	CQD16	CQD18	CQD20
	in(mm)	in(mm)	in(mm)	in(mm)	in(mm)	lb/kg	lb/kg	lb/kg	lb/kg
Full Free Lift 3 Stage Mast	198(5030)	95(2415)	239(6063)	239(6063)	53(1342)	3000(1360)	3500(1588)	4000(1814)	4500(2041)
	210(5330)	99(2515)	251(6363)	251(6363)	57(1442)	3000(1360)	3500(1588)	4000(1814)	4500(2041)
	240(6100)	107(2718)	281(7133)	281(7133)	65(1645)	3000(1360)	3500(1588)	4000(1814)	4000(1814)
	270(6860)	119(3025)	311(7893)	311(7893)	77(1952)	3000(1360)	3500(1588)	3500(1588)	3500(1588)
	299(7600)	133(3380)	340(8633)	340(8633)	91(2307)	3000(1360)	3000(1360)	3000(1360)	3000(1360)

With integral sideshifter minus 220lb[100kg].

Mast Specification (HEAVY DUTY)

	Lift	Height, Mast Lowered	Height, Mast Extended		Free lift	Load capacity @610mm/24inch			
			With Backrest	Without Backrest		CQD14	CQD16	CQD18	CQD20
	in(mm)	in(mm)	in(mm)	in(mm)	in(mm)	lb/kg	lb/kg	lb/kg	lb/kg
Full Free Lift 3 Stage Mast	270(6860)	119(3025)	311(7893)	311(7893)	77(1952)	3000(1361)	3500(1588)	4000(1814)	4500(2041)
	299(7600)	133(3380)	340(8633)	340(8633)	91(2307)	3000(1361)	3500(1588)	3835(1750)	4000(1814)
	321(8150)	140(3560)	362(9183)	362(9183)	98(2487)	3000(1361)	3500(1588)	3748(1700)	3835(1750)
	341(8660)	149(3785)	382(9693)	382(9693)	107(2712)	3000(1361)	3500(1588)	3527(1600)	3638(1650)
	366(9300)	160(4060)	407(10333)	407(10333)	118(2987)	3000(1361)	3307(1500)	3307(1500)	3417(1550)
	400(10160)	172(4365)	441(11193)	441(11193)	130(3292)	3000(1361)	3086(1400)	3086(1400)	3197(1450)
	421(10700)	179(4545)	462(11733)	462(11733)	137(3472)	2866(1300)	2866(1300)	2866(1300)	2976(1350)

With integral sideshifter minus 220lb[100kg].

X Series Lithium-ion Narrow Aisle Pantograph Single Reach Truck

Distinguishing Marks	1.1	Manufacturer		HANGCHA GROUP CO.,LTD.			
		HCFA Model		SR14Li	SR16Li	SR18Li	SR20Li
	1.2	Manufacturer's Type Designation		CQD14-XD2-JI	CQD16-XD2-JI	CQD18-XD2-JI	CQD20-XD2-JI
	1.3	Drive: electric (battery or mains), diesel, petrol, fuel gas		Electric			
	1.4	Operator Type: hand, pedestrian, standing, seated, order-picker		Stand up			
	1.5	Rated Capacity/Rated Load	Q (lb/kg)	3000 (1361)	3500 (1588)	4000 (1814)	4500 (2041)
	1.6	Load Centre Distance	c (in/mm)	24 (600)			
	1.8	Load Distance, centre of drive axle to fork	x (in/mm)	10.8 (274)			
	1.9	Wheelbase	y (in/mm)	See See Table 1			
Weight	2.1	Service Weight, without battery	lb (kg)	6725(3050)			7253 (3290)
	2.2	Axle Loading, laden front/rear with assemble retracted	lb (kg)	6737(3056)/3580(1624) ①	7026(3187)/3732(1693) ①	7313(3317)/3887(1763) ①	7948(3605)/4222(1915) ①
	2.3	Axle Loading, unladen front/rear with assemble retracted	lb (kg)	2826(1282)/4405(1998)①			3034(1376)/4727(2144)①
Tires & Chassis	3.1	Tires: solid rubber, superelastic, pneumatic, polyurethane		Polyurethane			
	3.2	Wheels Size, load	in(mm)	5×3.9(Φ127×99)			
	3.3	Wheels Size, drive	in(mm)	13.5×5.5(Φ343×135)			
	3.4	Wheels Size, caster	in(mm)	7.9×2.2(Φ200×56)			
Dimensions	4.1	Tilt of Mast/Fork Carriage Forward/Backward	α/β (°)	3/4			
	4.2	Height, mast lowered	h_1 (in/mm)	95(2415)			
	4.3	Free Lift	h_2 (in/mm)	53(1342)			
	4.4	Lift	h_3 (in/mm)	198(5030)			
	4.5	Height, mast extended	h_4 (in/mm)	239(6063)			
	4.7	Height of Overhead Guard	h_6 (in/mm)	92.5(2350)			
	4.8	Stand Height	h_7 (in/mm)	9.5(240)			
	4.10	Height of Wheel Arms	h_8 (in/mm)	5.1(130)			
	4.19	Overall Length	l_1 (in/mm)	See Table 1			
	4.20	Length to Face of Forks	l_2 (in/mm)	See Table 1			
	4.21	Overall Width	b_1 (in/mm)	42.5(1080)			
	4.22	Fork Dimensions, Std.	s/e/l (in/mm)	1.6/4.8/42(40/122/1070)			
		Fork Dimensions, Opt.	s/e/l (in/mm)	1.8/4.8/L(45/122/L),L>1500			
	4.24	Fork-Carriage Width	b_3 (in/mm)	37(942)			
	4.25	Distance between Fork-Arms	b_5 (in/mm)	7.9-29.9(200-760)			
	4.26	Distance Between Wheel Arms/Loading Surfaces	b_4 (in/mm)	34-50(864-1270) (1" increments)			
	4.28	Reach Distance	l_4 (in/mm)	24(610)			
	4.31	Ground Clearance, laden, below mast	m_1 (in/mm)	2(50)			
	4.32	Ground Clearance, centre of wheelbase	m_2 (in/mm)	2(50)			
	4.34	Aisle Width for Pallets (clearance 7.9")	Ast (in/mm)	See Table 1			
	4.35	Turning Radius	Wa (in/mm)	See Table 1			
Performance Data	5.1	Travel Speed, laden/unladen	mph km/h	6.5/7.5 10.5/12			
	5.2	Lift Speed, laden/unladen	fpm mm/s	78/105 395/535	72/105 365/535	68/105 345/535	65/105 330/535
	5.3	Lowering Speed, laden/unladen	fpm mm/s	105/105 533/533			
	5.4	Reach Speed, laden/unladen	fpm mm/s	31/35 160/180			
	5.7	Gradeability, laden/unladen	%	10/12			
		Parking Brake		Electromagnetic			
Electric Motor	6.1	Drive Motor Rating at S2 60 min	hp/kW	8.6(6.4)			
	6.2	Lift Motor Rating at S3 15%	hp/kW	17.4(13)			
	6.4	Battery Voltage, nominal capacity	V/Ah	38.6/606			
		Battery Voltage, nominal capacity	V/Ah	38.6/813			
	6.5	Max. Battery Weight	lb (kg)	See Table 1			
		Min. Battery Weight	lb (kg)	See Table 1			
		Battery Compartment Size, l/b/h	in(mm)	See Table 1			
Additional Data	10.7	Sound Pressure Level at the Driver´s Seat	dB (A)	62			

Note: ① With min. battery

Table 1

Battery and Compartment Size				16.5"	18.5"
6.4	Battery Voltage		V	38.6	38.6
	Battery Capacity Maximum 5 Hr Rate		Ah	606	813
	Battery Compartment	"X" Max.	in(mm)	38.4(976)	38.8(985)
		"Y" Max.	in(mm)	13(330)	15.55(395)
		"Z" Max.	in(mm)	29.1(740)	30.7(780)
6.5	Minimum Battery Weight		lb(kg)	507(230)	683(310)
	Maximum Battery Weight		lb(kg)	551(250)	727(330)
1.9	Wheelbase		y (in\mm)	57.79(1469)	59.79(1519)
4.19	Overall Length		l1 (in\mm)	74.7(1898)	76.7(1948)
4.20	Length to Face of Forks		l2 (in\mm)	57(1450)②	59(1500)②
4.35	Turning Radius		Wa (in\mm)	67.7(1722)	69.7(1772)
4.34	Ast 40"L(1026mm)×48"W(1220mm) Clearance 7.9"		Ast in(mm)	105.24(2673)②	107.24(2724)②
	Ast 48"L(1220mm)×40"W(1026mm) Clearance 7.9"		Ast in(mm)	112.87(2867)②	114.88(2918)②
	Ast 48"L(1220mm)×32"W(813mm) Clearance 7.9"		Ast in(mm)	112.87(2867)②	114.88(2918)②

Note: ②Add 1"(50mm) with sideshift

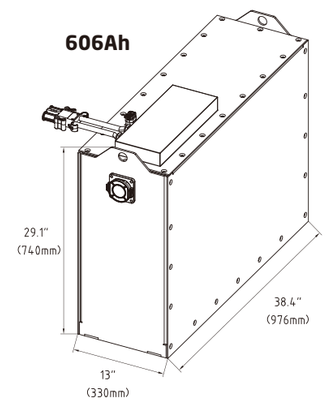

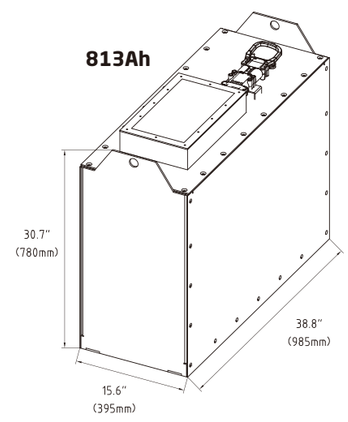

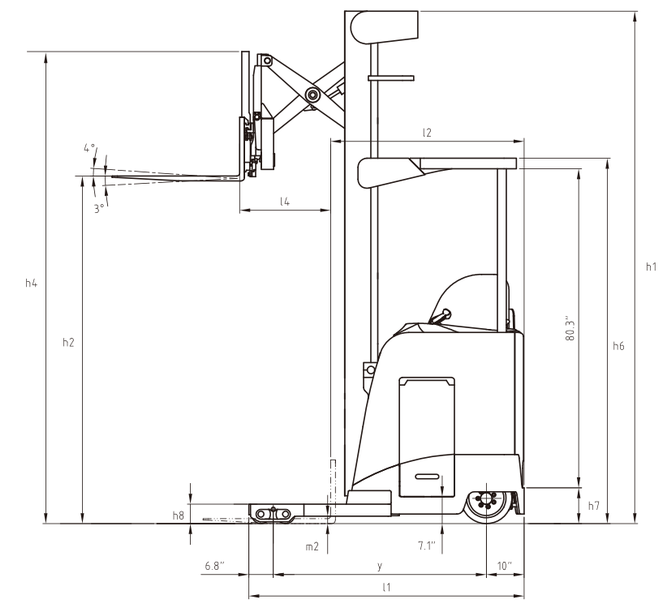

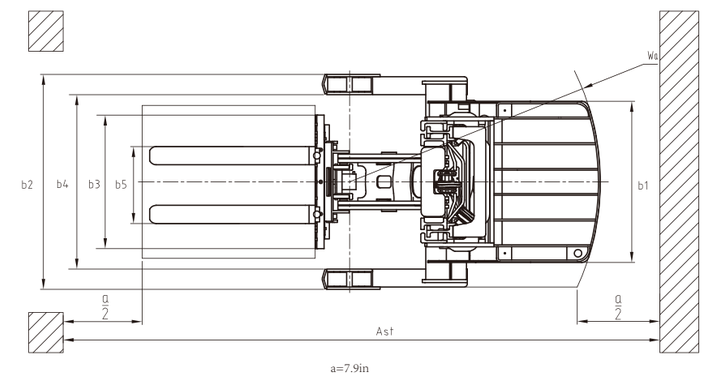

RATED CAPACITY AND LOAD DIAGRAM

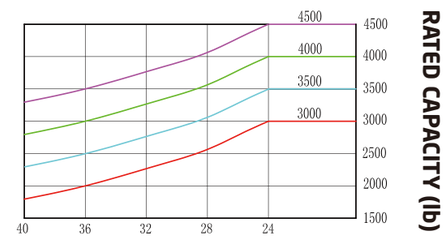

X Series Lithium-ion Narrow Aisle Pantograph Double Reach Truck

Distinguishing Marks	1.1	Manufacturer		HANGCHA GROUP CO.,LTD.	
		HCFA Model		DR14Li	DR16Li
	1.2	Manufacturer's Type Designation		CQD14-XD2-JDI	CQD16-XD2-JDI
	1.3	Drive: electric (battery or mains), diesel, petrol, fuel gas		Electric	Electric
	1.4	Operator Type: hand, pedestrian, standing, seated, order-picker		Standing	Standing
	1.5	Rated Capacity/Rated Load	Q (lb/kg)	3000(1361)	3500(1588)
	1.6	Load Centre Distance	c (in/mm)	24(600)	24(600)
	1.8	Load Distance, centre of drive axle to fork	x (in/mm)	14.2(360)	14.2(360)
	1.9	Wheelbase	y (in/mm)	See Table 2	See Table 2
Weight	2.1	Service Weight, without battery	lb (kg)	3405(3175)	7365(3340)
	2.2	Axle Loading, laden front/rear with assemble retracted	lb (kg)	6590(2989)/4004(1816) ①	7374(3345)/4023(1825) ①
	2.3	Axle Loading, unladen front/rear with assemble retracted	lb (kg)	2943(1335)/4564(2070) ①	3102(1407)/4769(2163) ①
Tires & Chassis	3.1	Tires: solid rubber, superelastic, pneumatic, polyurethane		Polyurethane	Polyurethane
	3.2	Wheels Size, load	in(mm)	5×3.9(Φ127×99)	5×3.9(Φ127×99)
	3.3	Wheels Size, drive	in(mm)	13.5×5.5(Φ343×135)	13.5×5.5(Φ343×135)
	3.4	Wheels Size, caster	in(mm)	7.9×2.2(Φ200×56)	7.9×2.2(Φ200×56)
Dimensions	4.1	Tilt of Mast/Fork Carriage Forward/Backward	α/β (°)	3/4	3/4
	4.2	Height, mast lowered	h1 (in/mm)	95(2415)	95(2415)
	4.3	Free Lift	h2 (in/mm)	53(1342)	53(1342)
	4.4	Lift	h3 (in/mm)	198(5030)	198(5030)
	4.5	Height, mast extended	h4 (in/mm)	239(6063)	239(6063)
	4.7	Height of Overhead Guard	h6 (in/mm)	92.5(2350)	92.5(2350)
	4.8	Stand Height	h7 (in/mm)	9.5(240)	9.5(240)
	4.10	Height of Wheel Arms	h8 (in/mm)	5.1(130)	5.1(130)
	4.19	Overall Length	l1 (in/mm)	See Table 2	See Table 2
	4.20	Length to Face of Forks	l2 (in/mm)	See Table 2	See Table 2
	4.21	Overall Width	b1 (in/mm)	42.5(1080)	42.5(1080)
	4.22	Fork Dimensions, Std.	s/e/l (in/mm)	1.6×4.8×42(40×122×1070)	1.6×4.8×42(40×122×1070)
		Fork Dimensions, Opt.	s/e/l (in/mm)	1.8×4.8×L(45×122×L),L>2000	1.8×4.8×L(45×122×L),L>2000
	4.24	Fork-Carriage Width	b3 (in/mm)	37(942)	37(942)
	4.25	Distance between Fork-Arms	b5 (in/mm)	7.9-29.9(200-760)	7.9-29.9(200-760)
	4.26	Distance Between Wheel Arms/Loading Surfaces	b4 (in/mm)	34-50(864-1270)(1" increments)	34-50(864-1270)(1" increments)
	4.28	Reach Distance	l4 (in/mm)	42(1067)	42(1067)
	4.31	Ground Clearance, laden, below mast	m1 (in/mm)	2(50)	2(50)
	4.32	Ground Clearance, centre of wheelbase	m2 (in/mm)	2(50)	2(50)
	4.34	Aisle Width for Pallets (clearance 7.9")	Ast (in/mm)	See Table 2	See Table 2
	4.35	Turning Radius	Wa (in/mm)	See Table 2	See Table 2
Performance Data	5.1	Travel Speed, laden/unladen	mph	6.5(10.5)	6.5(10.5)
			km/h	7.5(12)	7.5(12)
	5.2	Lift Speed, laden/unladen	fpm	78/105	72/105
			mm/s	395/535	365/535
	5.3	Lowering Speed, laden/unladen	fpm	105/105	105/105
			mm/s	533/533	533/533
	5.4	Reach Speed, laden/unladen	fpm	31/35	31/35
			mm/s	160/180	160/180
	5.7	Gradeability, laden/unladen	%	10/12	10/12
		Parking Brake		Electromagnetic	Electromagnetic
Electric Motor	6.1	Drive Motor Rating at S2 60 min	hp/kW	8.6(6.4)	8.6(6.4)
	6.2	Lift Motor Rating at S3 15%	hp/kW	17.4(13)	17.4(13)
	6.4	Battery Voltage, nominal capacity	V/Ah	38.6/606	38.6/606
		Battery Voltage, nominal capacity	V/Ah	38.6/813	38.6/813
	6.5	Max. Battery Weight	lb (kg)	See Table 2	See Table 2
		Min. Battery Weight	lb (kg)	See Table 2	See Table 2
		Battery Compartment Size, l/b/h	in(mm)	See Table 2	See Table 2
Additional data	10.7	Sound Pressure Level at the Driver`s Seat	dB (A)	62	62

Note: ① With min. battery

Mast Specification

	Lift	Height, Mast Lowered	Height, Mast Extended		Free Lift	Load capacity @42inch/1067mm	
			With Backrest	Without Backrest		DR14Li	DR16Li
	in(mm)	in(mm)	in(mm)	in(mm)	in(mm)	lb/kg	lb/kg
Full Free Lift 3 Stage Mast	198(5030)	95(2415)	239(6063)	239(6063)	53(1342)	3000(1361)	3500(1588)
	210(5330)	99(2515)	251(6363)	251(6363)	57(1442)	3000(1361)	3330(1510)
	240(6100)	107(2718)	281(7133)	281(7133)	65(1645)	2888(1310)	3000(1360)
	270(6860)	119(3025)	311(7893)	311(7893)	77(1952)	2490(1130)	2600(1180)
	299(7600)	133(3380)	340(8633)	340(8633)	91(2307)	2116(960)	2227(1010)

With integral sideshifter minus 220lb(100kg).

Mast Specification (HEAVY DUTY)

	Lift	Height, Mast Lowered	Height, Mast Extended		Free Lift	Load Capacity @42inch/1067mm	
			With Backrest	Without Backrest		DR14Li	DR16Li
	in(mm)	in(mm)	in(mm)	in(mm)	in(mm)	lb/kg	lb/kg
Full Free Lift 3 Stage Mast	270(6860)	119(3025)	311(7893)	311(7893)	77(1952)	3000(1361)	3500(1588)
	299(7600)	133(3380)	340(8633)	340(8633)	91(2307)	3000(1361)	3417(1550)
	321(8150)	140(3560)	362(9183)	362(9183)	98(2487)	3000(1361)	3307(1500)
	341(8660)	149(3785)	382(9693)	382(9693)	107(2712)	3000(1361)	3197(1450)
	366(9300)	160(4060)	407(10333)	407(10333)	118(2987)	2866(1300)	2976(1350)
	400(10160)	172(4365)	441(11193)	441(11193)	130(3292)	2646(1200)	2756(1250)
	421(10700)	179(4545)	462(11733)	462(11733)	137(3472)	2315(1050)	2425(1100)

With integral sideshifter minus 220lb(100kg).

Table 2

Battery and Compartment Size				16.5"	18.5"
6.4	Battery Voltage		V	38.6	38.6
	Battery Capacity Maximum 5 Hr Rate		Ah	606	813
	Battery Compartment	"X" Max.	in(mm)	38.4(976)	38.8(985)
		"Y" Max.	in(mm)	13(330)	15.55(395)
		"Z" Max.	in(mm)	29.1(740)	30.7(780)
6.5	Minimum Battery Weight		lb(kg)	507(230)	683(310)
	Maximum Battery Weight		lb(kg)	551(250)	727(330)
1.9	Wheelbase		y (in/mm)	62.79(1596)	64.79(1646)
4.19	Overall Length		l1 (in/mm)	77.7(2025)	79.7(2075)
4.20	Length to Face of Forks		l2 (in/mm)	64.6(1641)②	67.6(1691)②
4.35	Turning Radius		Wa (in/mm)	72.7(1849)	74.7(1899)
4.34	Ast 40"L(1026mm)×48"W(1220mm) Clearance 7.9"		Ast in(mm)	106.81(2713)②	108.82(2764)②
	Ast 48"L(1220mm)×40"W(1026mm) Clearance 7.9"		Ast in(mm)	114.45(2907)②	116.46(2958)②
	Ast 48"L(1220mm)×32"W(813mm) Clearance 7.9"		Ast in(mm)	114.45(2907)②	116.46(2958)②

Note: ②Add 1" (50mm) with sideshift

RATED CAPACITY AND LOAD DIAGRAM

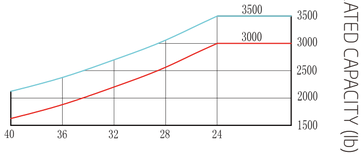

LOAD CENTER DISTANCE (in)

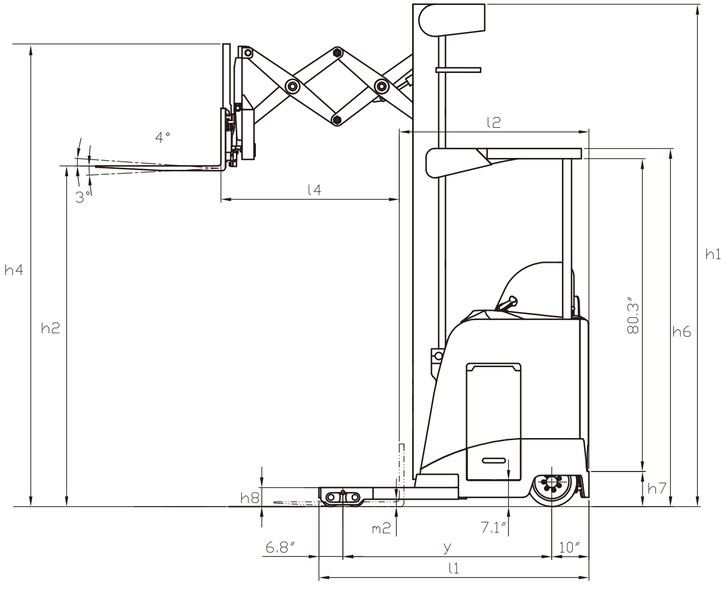

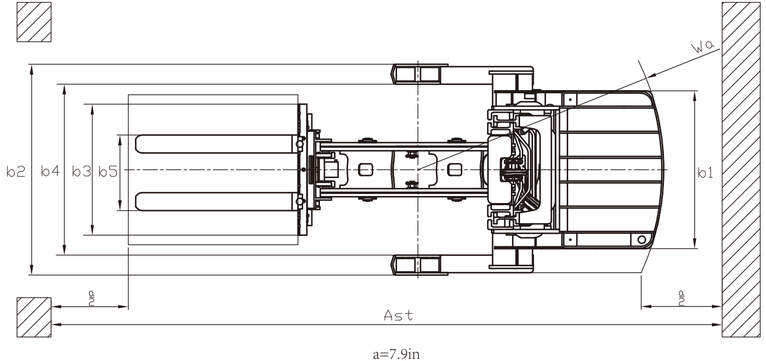

a=7.9in